CHAPTER 6

REPORTS CONTROL AND RECORDS DISPOSAL

Reports control is a management tool designed to assure efficient response to local and higher echelon requirements for information. Each activity is required to establish a continuing and systematic appraisal of reports.

The contents of your files are of such significance that our Congress has passed laws governing their disposition and fixing penalties for unauthorized destruction. These laws apply to unclassified as well as classified matter.

This chapter gives you a basic understanding of the Department of the Navy Information Requirements (Reports) Management Program that a report control manager must deal with in order to have an effective information requirements management program. In the latter part of this chapter we discuss the major elements that govern the proper disposal of government records.

REPORTS CONTROL SYSTEM

A single office within each Navy command should be designated as the reports control point to review and process existing and proposed reports, reporting systems, and their related directives. Normally, the reports control manager is a function of the ship's secretary (afloat) or the administrative officer (ashore), with a senior Yeoman (YN) as reports control point supervisor. The responsibilities of the reports control point include the following:

- Approving proposed new reports or revisions to reports before they are issued to make sure that they conform to reporting standards and that they do not duplicate required information
- Assigning identification symbols to such reports
- Performing follow-up reviews of individual reports on a scheduled basis
- Maintaining a central information inventory (case file) on reports required and prepared by the organization

DEFINITIONS

Reports are required for distribution, training, promotion planning, statistical purposes, and so forth. To provide information for all these purposes, various reports are required. The definitions of the different kinds of reports are as follows:

- A report is a collection of data or information regardless of the method of preparation or transmission for use in determining policy; planning, controlling, and evaluating operations and performance; making administrative determinations; or preparing other reports. The data or information may be submitted in any method of preparation or transmission; for example, narrative, statistical, graphic, magnetic tape, or other media.
- An as-required report is a report that a particular office or organization requires from another office or organization.
- A status report is an interim report explaining the amount of work completed or to be completed on an established report.
- A survey or personnel survey is an organized effort to obtain information from persons about themselves, their attitudes, perceptions, beliefs, opinions, or interests. The acquisition of such information is not a normal administrative requirement internal to the command.
- A one-time report is a report required one time only from one or more respondents. A new directive must be issued each time such a report is required. One-time reports are assigned a report control symbol according to the standard subject identification code (SSIC) using OT as the suffix number.
- A recurring report is a report that conveys essential] y the same type of information at recurring intervals; for example, daily, weekly, monthly, or annually.
- Situation reports are recurring reports prepared and required upon each occurrence, recurrence, or nonoccurrence of an event or situation; for example, upon graduation or the occurrence of an accident.

- An information requirement is a report from which an office or organization draws part or all of the data required for another report.

- A reporting system is the means through which a report or related reports, including the procedures, methods of preparing, and transmitting, achieve either a single end result or support a complete information system, a portion of a system, or an operation.

- A reports analysis is a management service that provides for making or assisting in analysis studies for the purpose of developing and ensuring continued provision of the most effective reports and reporting systems.

- A public report is a plan and/or report form used by or for a government agency for the collection of information from the general public including private agencies and industrial concerns. Each request to collect information from the public must be approved by the Office of Management and Budget (OMB).

REPORT SYMBOLS/REPORT CONTROL SYMBOLS

Although some reports are exempt from the requirement for a report symbol (see the *Review of Proposed Administrative Issuances,* SECNAVINST 5200.29B), most reports will be identified, along with their titles, by a report control symbol. This symbol indicates that the report has been reviewed and approved as a valid requirement and the respondents have the responsibility of providing the requested information.

ASSIGNMENT OF REPORT CONTROL SYMBOLS

A report control symbol is assigned by the command reports control manager. The Secretary of the Navy (SECNAV) and Office of the Chief of Naval Operations (OPNAV) report control symbols are assigned by the Commander, Naval Data Automation Command (COMNAVDAC). The symbol of the highest authority will appear on the report. For example, if a DD symbol is assigned to a report, all responding commands will use the DD symbol, expiration dates as assigned by the Office of the Secretary of Defense (OSD), and associated report title. Reports control managers must not substitute their own command symbol to a report having a higher level symbol.

The composition of a Navy report control symbol assigned by the reports control manager is as follows:

Example: OPNAV 5214-1

- The letters *OPNAV* indicate the authorized abbreviation of the bureau, office, shore activity, or fleet command that requires the report.

- The four or five digits together–5214 in the example–indicate the SSIC number that identifies the subject of the report. The SSIC 5214 pertains to Reports Management. Use the *Department of the Navy File Maintenance Procedures and Standard Subject ldentification Codes,* SECNAVINST5210.11D, to find the appropriate SSIC numbers and their associated subjects.

- The last digit, separated by a dash, is the next consecutive number in that SSIC series. In the example, OPNAV 5214-1 is the first OPNAV symbolized report in the 5214 series.

- Consecutive numbers assigned in a report control symbol must not be reused even if the report is subsequently canceled or expired.

- The composition of a Department of Defense (DOD) report control symbol assigned by the reports control manager in the Office of the Assistant Secretary of Defense (Comptroller) is as follows:

Example: DD-COMP (SA) 725–Reimbursable Transactions

- The letters DD indicate that this is a DOD report.

- The abbreviation before the parenthesis is the office within DOD requiring the report. COMP is the Office of the Comptroller.

- The letters in parentheses indicate the frequency of the report. SA is semiannual.

- The digits indicate the next consecutive number assigned by the DOD reports control manager for the overall system. The number 725 is the next consecutive number assigned for all DOD reports, not the next consecutive number for COMP reports.

- The Navy reports control manager assigns an appropriate SSIC number in parentheses after the DOD symbol. For Navy purposes the report control symbol DD-COMP(SA)725(7010) represents a DD report. The 7010 designates a report about nonappropriatcd funds. The entire number is written without spaces.

- A one-time DOD report control symbol is written as DD-COMP(OT)9336(7010). This is the same as the recurring report control symbol except that OT means the report will only be submitted one time. The first two digits, 93, indicate the calendar year the report was established and the next two digits, 36, reflect the next consecutive number for one-time reports controlled for that year. The figure 9336 in the example indicates that this is the 36th one-time report assigned in calendar year 1993.

It is important to note that, although similar in nature, report control symbols and forms identification codes are separate entities. Even though the originator and subject identification code of both maybe the same, the consecutive number in each may not coincide. The same holds true for the relationship between the report and its requiring directive.

INVENTORY OF REPORTS

An accurate and current inventory of recurring reports is essential for effective operation and is maintained by the reports control manager. A case folder must be maintained on all reports for which your activity has cognizance. The Reports Record Card, OPNAV 5214/5 (fig. 6-1), may be used to establish a manual inventory system or an automated management data fields system may be obtained from the COMNAVDAC.

A close working relationship with the directives control point, forms manager, mail room, publications review office, and other points or individuals within the command who may be aware of new or revised reports requirements will help greatly in your efforts.

ESTABLISHMENT AND MAINTENANCE OF RECORDS

After all recurring reports have been inventoried and classified by a report symbol, one folder for each report should be filed in a report case file. Every folder should contain the following documents

- A copy of completed Report Analysis Data, OPNAV Form 5214/10 (figs. 6-2A and 6-2B
- A copy of the report form, format, or a copy of the report
- A copy of the document requiring the report
- Related papers, such as source records, analyses, surveys, and memos, pertaining to the report

Folders within the case file should be arranged chronologically by report control symbol.

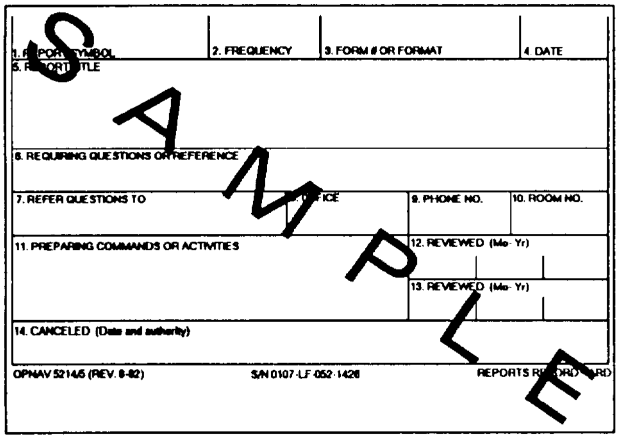

1. REPORT SYMBOL	2. FREQUENCY	3. FORM # OR FORMAT	4. DATE
5. REPORT TITLE			
6. REQUIRING QUESTIONS OR REFERENCE			
7. REFER QUESTIONS TO	8. OFFICE	9. PHONE NO.	10. ROOM NO.
11. PREPARING COMMANDS OR ACTIVITIES		12. REVIEWED (Mo- Yr) 13. REVIEWED (Mo- Yr)	
14. CANCELED (Date and authority)			

OPNAV 5214/5 (REV. 8-82) S/N 0107-LF-052-1420 REPORTS RECORD CARD

SAMPLE

Figure 6-1.-Reports Record Card, OPNAV 5214/5.

FOLLOW-UP PROCEDURES

Established reports required by the command must be given follow-up review to determine whether they continue to be needed and, if so, whether they continue to meet all the requirements in the most effective reamer in light of changing needs and situations, relationship to other reports, possible consolidations, and new developments in reporting devices and techniques.

A report must be reviewed before its expiration to determine if it continues to meet requirements efficiently. This review is done by the report originator 60 days before the third anniversary of the administrative issuance requiring the report to include complete rejustification of the requirement. Reports not approved for extension are automatically canceled on the third anniversary date and are omitted from any subsequent effective reports listing.

Possibly the most effective way to provide an annual review of every report required by your command is to combine the reviews with the annual review of command directives. Since each required report has a command directive as its basis, a complete review of that directive 3 months before the anniversary month of its issue date would provide the opportunity for an in-depth look at any report listed therein. (This is also an excellent time to accomplish a review of the local forms used for these reports. See chapter 5.)

In accomplishing this review, a copy of the report form and a blank OPNAV Form 5214/10 covering the report would be provided to the reviewing office along with the applicable directive. A decision to modify, cancel, or continue the existing directive would, likewise, contain a similar decision concerning any report or form required by the directive.

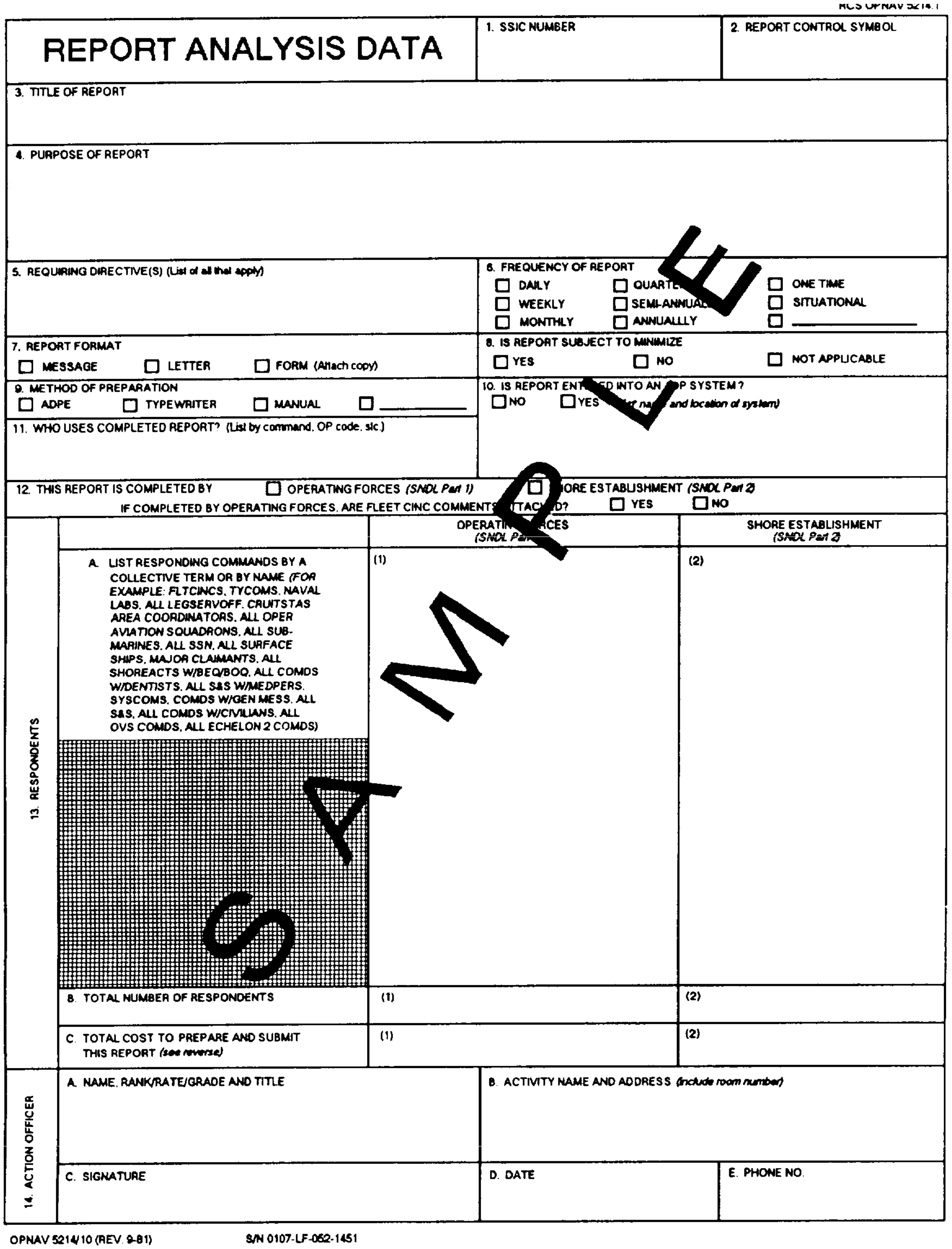

RCS OPNAV 5214.1

REPORT ANALYSIS DATA

1. SSIC NUMBER

2. REPORT CONTROL SYMBOL

3. TITLE OF REPORT

4. PURPOSE OF REPORT

5. REQUIRING DIRECTIVE(S) (List of all that apply)

6. FREQUENCY OF REPORT
☐ DAILY ☐ QUARTE ☐ ONE TIME
☐ WEEKLY ☐ SEMI-ANNUA ☐ SITUATIONAL
☐ MONTHLY ☐ ANNUALLLY ☐ ____________

7. REPORT FORMAT
☐ MESSAGE ☐ LETTER ☐ FORM (Attach copy)

8. IS REPORT SUBJECT TO MINIMIZE
☐ YES ☐ NO ☐ NOT APPLICABLE

9. METHOD OF PREPARATION
☐ ADPE ☐ TYPEWRITER ☐ MANUAL ☐ ____________

10. IS REPORT ENT ED INTO AN P SYSTEM?
☐ NO ☐ YES *na and location of system)*

11. WHO USES COMPLETED REPORT? (List by command, OP code, slc.)

12. THIS REPORT IS COMPLETED BY ☐ OPERATING FORCES *(SNDL Part 1)* ☐ ORE ESTABLISHMENT *(SNDL Part 2)*
IF COMPLETED BY OPERATING FORCES, ARE FLEET CINC COMMENTS TTAC D? ☐ YES ☐ NO

13. RESPONDENTS		OPERATI CES *(SNDL Pa*	SHORE ESTABLISHMENT *(SNDL Part 2)*
	A. LIST RESPONDING COMMANDS BY A COLLECTIVE TERM OR BY NAME *(FOR EXAMPLE: FLTCINCS, TYCOMS, NAVAL LABS, ALL LEGSERVOFF, CRUITSTAS AREA COORDINATORS, ALL OPER AVIATION SQUADRONS, ALL SUB-MARINES, ALL SSN, ALL SURFACE SHIPS, MAJOR CLAIMANTS, ALL SHOREACTS W/BEQ/BOQ, ALL COMDS W/DENTISTS, ALL S&S W/MEDPERS, SYSCOMS, COMDS W/GEN MESS, ALL S&S, ALL COMDS W/CIVILIANS, ALL OVS COMDS, ALL ECHELON 2 COMDS)*	(1)	(2)
	B. TOTAL NUMBER OF RESPONDENTS	(1)	(2)
	C. TOTAL COST TO PREPARE AND SUBMIT THIS REPORT *(see reverse)*	(1)	(2)

14. ACTION OFFICER			
	A. NAME, RANK/RATE/GRADE AND TITLE	B. ACTIVITY NAME AND ADDRESS *(include room number)*	
	C. SIGNATURE	D. DATE	E. PHONE NO.

OPNAV 5214/10 (REV. 9-81) S/N 0107-LF-052-1451

SAMPLE

Figure 6-2A.-Report Analysis Data, OPNAV Form 5214/10 (front).

Combining reviews as discussed previous] y should provide new dimensions to your effectiveness as a reports control point supervisor/senior YN. In addition, your awareness of command directives, reports, and forms will enhance your value to the command.

CLEARANCE PROCEDURES

When new command directives are being originated and when existing directives are being revised, it is your responsibility as reports control point supervisor to

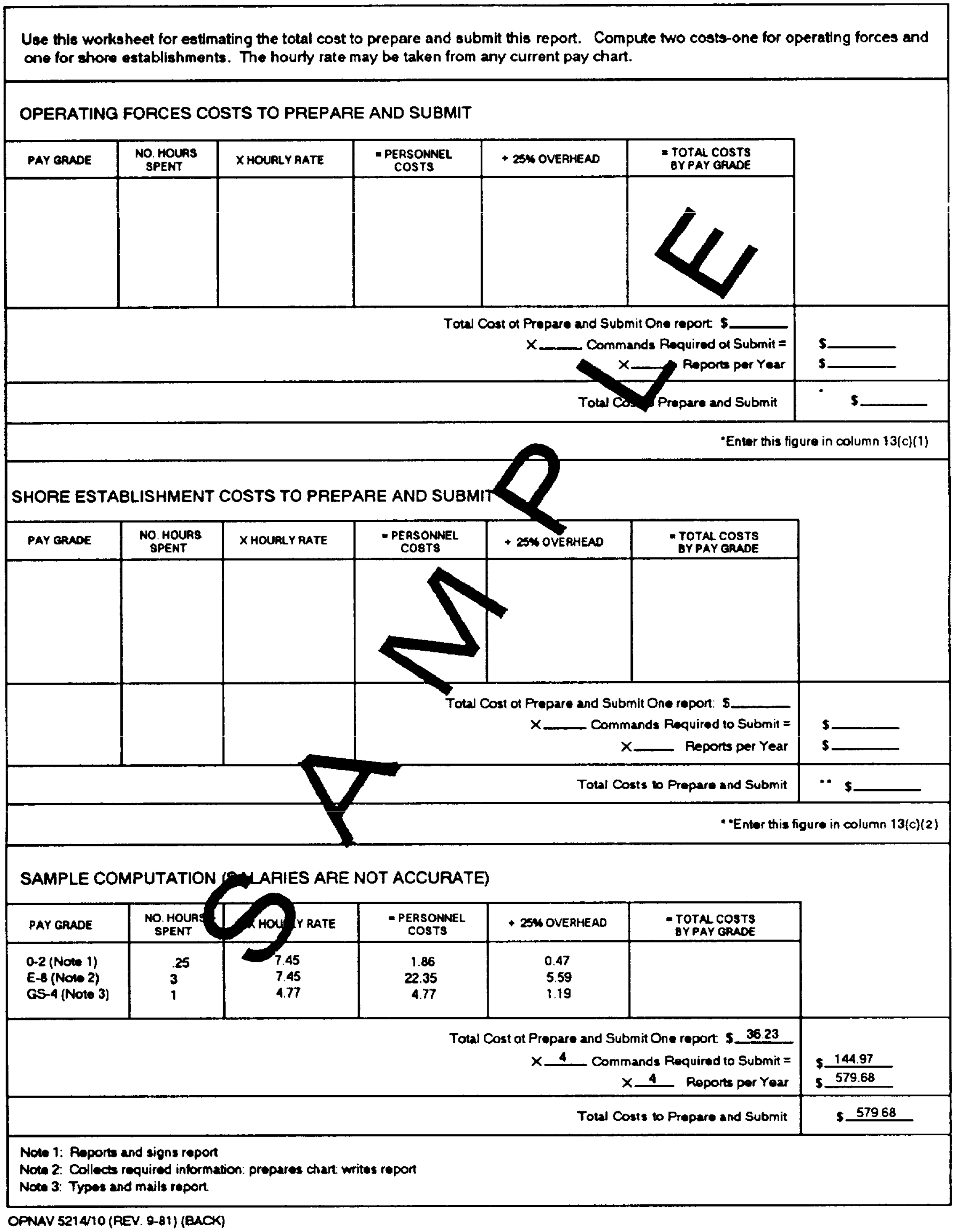

SAMPLE

Use this worksheet for estimating the total cost to prepare and submit this report. Compute two costs-one for operating forces and one for shore establishments. The hourly rate may be taken from any current pay chart.

OPERATING FORCES COSTS TO PREPARE AND SUBMIT

PAY GRADE	NO. HOURS SPENT	X HOURLY RATE	= PERSONNEL COSTS	+ 25% OVERHEAD	= TOTAL COSTS BY PAY GRADE

Total Cost ot Prepare and Submit One report: $______

X_____ Commands Required ot Submit = $______

X_____ Reports per Year $______

Total Co[illegible] Prepare and Submit * $______

*Enter this figure in column 13(c)(1)

SHORE ESTABLISHMENT COSTS TO PREPARE AND SUBMIT

PAY GRADE	NO. HOURS SPENT	X HOURLY RATE	= PERSONNEL COSTS	+ 25% OVERHEAD	= TOTAL COSTS BY PAY GRADE

Total Cost ot Prepare and Submit One report: $______

X_____ Commands Required to Submit = $______

X_____ Reports per Year $______

Total Costs to Prepare and Submit ** $______

**Enter this figure in column 13(c)(2)

SAMPLE COMPUTATION (SALARIES ARE NOT ACCURATE)

PAY GRADE	NO. HOURS SPENT	X HOURLY RATE	= PERSONNEL COSTS	+ 25% OVERHEAD	= TOTAL COSTS BY PAY GRADE
0-2 (Note 1)	.25	7.45	1.86	0.47	
E-8 (Note 2)	3	7.45	22.35	5.59	
GS-4 (Note 3)	1	4.77	4.77	1.19	

Total Cost ot Prepare and Submit One report: $ 36.23

X 4 Commands Required to Submit = $ 144.97

X 4 Reports per Year $ 579.68

Total Costs to Prepare and Submit $ 579.68

Note 1: Reports and signs report
Note 2: Collects required information: prepares chart: writes report
Note 3: Types and mails report.

OPNAV 5214/10 (REV. 9-81) (BACK)

Figure 6-2B.-Report Analysis Data, OPNAV Form 5214/10 (back).

make sure any report required therein has been approved by the reports control manager and forms manager while the rough directive is still in the review process. This is also the time to verify that the report control symbol and report title are specifically included in the directive.

When a directive is to be canceled, you should make sure the control symbol and title of any report previously required by that directive are included in the canceling notice or in the cancellation paragraph of the superseding instruction. Always route canceled reports through the forms manager so that obsolete report forms can be removed from case files.

PUBLIC REPORTS

Requirements for public reports are examined and controlled by the reports control manager or supervisor, as are all other reports. Each request to collect information from the public must be approved by OMB. To obtain this approval, the originator of the request must include the report in the information collection budget (ICB) submitted to OMB in July of each year. The ICB consists of all existing and new public reports (both recurring and one-time) that might be established during the year. Since requirements for submission of the ICB frequently change each year, the originator should notify COMNAVDAC as soon as possible of any potential new public report in order to obtain guidance for including it in the ICB.

When a new report is to be approved or an existing one extended, the originator will submit six copies of the following completed documents via the chain of command to COMNAVDAC:

- Clearance Request and Notice of Action, Standard Form 83. Instructions for completing this form are contained in Standard Form 83a.
- A supporting statement prepared on bond paper following the specific instructions provided in the Standard Form 83a.
- The form, survey, questionnaire, or report, and all Privacy Act statements.
- Proposed instructions for completing the report, if any.
- The information to be submitted for publication in the *Federal Register.*

COMNAVDAC will submit the ICB to the Assistant Secretary of Defense (Comptroller) (ASD [C]) for review and forwarding to OMB for final action.

The originator will receive written notification of OMB's final action. If the report is approved, a report control symbol and expiration date will be assigned to the report. The symbol must be used on all subsequent documentation concerning the report. If approval is not granted, the information may not be collected. Collecting information that has not been approved by OMB is a direct violation of Public Law 96-511.

PUBLISHING LISTS OF REPORTS

The reports control office should publish and distribute a list of current and canceled reports required or prepared by the command. Organizational units within the command are required to review the list and notify the reports control office of any discrepancies. Revised lists should be published annually with quarterly supplements as necessary.

List of Current Reports

The published list of current reports should include the following information:

- Report control symbol
- Title of the report
- Form number or format
- Frequency of submission
- Reference to the directive or document requiring the report
- Specific office within the organization or the unit outside the organization requiring the report
- Specific office(s) that prepare(s) the report

One copy of the list (usually a command notice) should be maintained as a master by the petty officer assigned to monitor reports submissions.

List of Canceled Reports

Append to each revised list of current reports and quarterly supplement a list of all reports canceled during the period covered by the issuance. The document that originally required the canceled report should also be listed.

Regardless of how efficient you feel you may have been in keeping the master list and case file current, you should always make an inventory of the reports (and forms) case file before issuing a new effective list of current and canceled reports.

OVERDUE REPORTS

The most elaborate reports management system that could be devised is only as good as the actions taken to make sure reports are submitted/received on time. This is accomplished by completing a Reports Record Card, OPNAV 5214/5, on each report. This is known as the reports tickler card. With these cards, a tickler system can be established. If a report is late, the purpose of the system and perhaps the report itself is defeated.

Tickler System

The tickler system provides an index to the required reports and shows the submission date of each. The manner in which a tickler file is made up may vary with each command. It is suggested that you use 5-inch by 8-inch cards with separations or tabs marked as follows:

DAILY
WEEKLY
MONTHLY
QUARTERLY
SEMIANNUALLY
ANNUALLY
WHEN OCCURRING (SITUATIONAL)

January through December

1 through 31 for use with current month

Although it may not be necessary to use aall the tabs or separators, depending on the makeup of your file, those separators are generally placed in a standard-size box (called the tickler box) with the Reports Record Card, OPNAV 5214/5, tiled between the appropriate separators to reflect the tickler date on which the report should be prepared. The report tickler file requires daily attention if it is to be an effective aid.

In addition to current reports, the reports tickler file may be used for the following:

- As a reminder of action required on incoming mail, such as a reply that may be required on an incoming letter
- As a reminder of nonreceipt of a reply to an outgoing letter from your command

Tickler cards maybe prepared to serve the purposes of either of the previous conditions. However, an easier and more economical method would be to attach the third copy of the routing slip to incoming mail. In the case of outgoing mail, file a copy of the correspondence itself in the appropriate place in the tickler box to serve as a reminder of action required.

Notice to Departments

To make sure departments submit all reports when due, a command should have a system for alerting them in sufficient time before the actual due date. This may be done in one or both of the following ways:

- Add a list of all the reports that will come due in the following week to the command's weekly list of overdue reports/correspondence. This is a recommended practice for improving timeliness in reports submissions.
- Provide a reports tickler card to offices preparing reports. This can stimulate good two-way communication between the departments concerned and the reports control office.

RECORDS DISPOSAL

All tasks connected with files, including their disposition, must be taken seriously. Since you maybe responsible for the work of juniors, you may also be directly involved in the proper disposal of tiles that have served their purpose.

Decisions to save or not save must not be avoided by saving all your tiles. No matter how firmly you believe that disposing of a file today will mean someone will need it tomorrow, holding files simply because someone might need them is not good management. If you are in doubt about disposal of certain records, avoid taking it upon yourself to either retain them or dispose of them. Before any decision is reached where doubt exists, consult with your superiors to decide what course of action should be taken.

The *Navy and Marine Corps Records Disposition Manual*, SECNAVINST 5212.5C, spells out the retention period of official files. It also gives information about whether official files must be destroyed or forwarded to a records center at the end of their retention period.

DEFINING RECORDS

It is possible that your tiles contain material that is not considered to be official record material. Pamphlets, books, extra copies of letters, directives, and so forth, are sometimes taking up space because nobody made a decision with regard to their retention value. Whether official or unofficial, material in your tiles must be disposed of at regular specified period. It must not be allowed to remain in your files longer than necessary.

The statutory definition of records, 82 Statute 1299, as amended, defines records as all documentary material, including books, papers, maps, photographs, machine-readable materials, or other documentary materials, regardless of physical form or characteristics made or received by an agency of the United States Government under federal law in connection with the transaction of public business and preserved or appropriate for preservation by that agency or its legitimate successor as evidence of the organization, functions, policies, decisions, procedures, operations, or other activities of the government or because of the information value of data in them.

Library and museum material made or acquired or preserved solely for reference or exhibition purposes, extra copies of documents preserved only for convenience of reference, and stocks of publications and of processed documents are not included.

The *Standard Organization and Regulations of the U.S. Navy* (SORM), OPNAVINST 3120.32B, defines official correspondence as all written material, documents, publications, charts, messages, and so forth, addressed to or sent from a command. These regulations prohibit persons having custody, possession, or control of official correspondence, forms, or records knowingly to deliver them or divulge their contents to any person not authorized to receive them. They prohibit selling, bartering, or trading official correspondence for monetary gain or other consideration.

Nonrecord material, then, may be defined as any material that serves no documentary or record purpose. (See SECNAVINST 5212.5C, appendix F, item 69.) In other words, it is material that is not worth having around except for a limited time. Within this category are items such as the following:

- Rough drafts, extra copies of letters kept for convenience of reference or for tickler purposes
- Some forms of publications received from other than government agencies and commercial firms (catalogs, trade journals)
- Items of only temporary value that serve no purpose once action is completed
- Reproduction materials, such as stencils, hectograph masters, and offset plates
- Shorthand notes, stenographic notebooks, and stenotype tapes that have been transcribed

It isn't always easy, or necessafy, to draw a neat distinction between record and nonrecord material and apply a hard and fast rule to each item. Each should be matched with a retention standard from SECNAVINST 5212.5C, and regularly disposed of by destruction or transfer to a records center. On rare occasions, it may be decided that because of some special circumstance, some items normally scheduled for destruction should be retained longer or indefinitely. In such cases the items would be transferred to a records center for further retention, rather than destroyed. But if you are as familiar with the business of your office as you should be, you won't have much trouble in applying the right disposal provisions to the records as they accumulate. And, normally, records should be disposed of promptly as scheduled.

Going back to the wording of the 82 Statute 1299, "appropriate for preservation" gives you a good rule of thumb as to whether or not an item should be destroyed or even filed in the first place, although almost everything that comes into your hands is filed for at least a short time.

WHAT GOVERNS DISPOSAL

The *United States Code* provides for fines and penalties including imprisonment, for unlawful and willful destruction or removal of government records. The Records Disposal Act of 1943 established the means to obtain legal authority for destruction of government records that are of no future value. This authority is granted by the Archivist of the United States. The National Archives and Records Administration (NARA) establishes procedures pertaining to disposal of government records.

To avoid indiscriminate destruction or removal of Navy records, *Navy Regulations*, 1990, Article 1115, states, "No person without proper authority shall withdraw official records or destroy them or withdraw them from those persons authorized to have access to them."

AUTHORITY FOR DISPOSAL

SECNAVINST 5212.5C provides the authority for disposition of naval records, including naval correspondence, accumulated by naval activities ashore and afloat. Recommendations for changes to this instruction must be addressed to the Chief of Naval Operations. Recommended changes must include a description of the records, a statement of their purpose and use, and justification for the change. A sample should be submitted for any record recommended for periodic destruction.

DISPOSITION RESPONSIBILITY

The individual responsible for custody of official records at your activity also has the additional responsibility of making sure official files are disposed of according to the appropriate disposal instructions.

To guarantee that the handling of records is not left to chance, an officer is usually assigned to the collateral duty of coordinating all records disposal action aboard an activity, either ship or station. This officer takes charge of the physical disposition of all records designated for transfer to a federal records center (FRC) or for destruction.

Your job, as the YN in charge of files, is to assist the responsible officer in making sure your records are complete and documented.

TYPES OF GENERAL RECORDS

The following types of general records normally are transferred to the nearest FRC:

- Records designated in SECNAVINST 5212.5C
- Records that have at least 3 years' retention period at the FRC
- Records designated in SECNAVINST 5212.5C for permanent retention
- Records that are inactive and no longer required for local operating purposes determined to be cost-effective to transfer to the FRC vice storing them locally

METHODS OF DISPOSITION

The official methods for the disposition of records are as follows:

- Destruction
- Donation to another federal agency or to nonfederal recipients
- Retirement
- Microfilming
- Transfer to an FRC for later destruction, or, if of permanent value, for eventual preservation at the NARA

Destruction

Most unclassified records are destroyed locally at the end of their retention period. Large quantities of unclassified matter may be sold for wastepaper or scrapped. Classified material must be destroyed by burning or other authorized method as outlined in the *Information and Personnel Security Program Regulation Manual,* OPNAVINST 5510.1H. The Records Disposal Act of 1943 provides for naval records to be destroyed without regard to statutory and regulatory requirements under two emergency conditions.

- When a state of war exists or hostile action appears imminent, naval records held outside the territorial limits of the continental United States (CONUS) may be authorized for emergency destruction. This authorization may come from SECNAV or the head of the command having custody of the records. However, before destruction, a determination must be made that retention of the records would be prejudicial to United States interests or that the records occupy space urgently needed for military purposes and are without sufficient value to warrant continued preservation. Within 6 months after the disposal of any records under this authorization, submit a written statement describing the records and showing when and where disposal occurred to COMNAVDAC (Code 80).

- Records such as nitrocellulose base film or tape sometimes become a menace to property, health, or life. Under such circumstances, 41 CFR 101-11.407-2 provides for their emergency destruction regardless of their retention period. If any naval record constitutes such a menace, a request should be made for its emergency destruction to COMNAVDAC (Code 80) via the administrative chain of command. COMNAVDAC (Code 80) will determine whether or not immediate destruction is warranted and, when necessary, obtain the concurrence of the Archivist of the United States.

The accidental destruction of records will be reported to COMNAVDAC (Code 80). If you are at sea, your unclassified and classified records should be destroyed by burning. At ashore activities, unclassified records may be scrapped or sold as wastepaper provided the records are either treated to destroy word content (by shredding), or by inserting a contract clause that prohibits the resale or use of the records or documents.

Donations

Naval records may be moved and assigned to other custody within the Naval Establishment, to FRCs, to the NARA, or to other government agencies. When moving the records involves a change in custody, the move is referred to as a records transfer. Changes in location within the activity, usually by removal to local storage areas, are referred to as records retirement.

When the public interest will be served, records authorized for disposal may be offered to an eligible person, organization, institution, corporation, or government (including a foreign government) that has made application for them. Records will not be transferred without prior written approval of the NARA. Request approval via COMNAVDAC (Code 80).

Retirement

Most naval records are short-term temporary records eligible for destruction in less than 5 years, and the bulk of these have retention periods of 2 years or less. These short-term records should be cut off at regular intervals, retired locally, and destroyed by the accumulating activity as soon as their retention periods have expired. Generally, it is not economical to transfer them to FRCs. The following records maybe retired to local storage areas:

- Short-term records eligible for destruction in less than 5 years
- Long-term records that must be retained close at hand until frequency of reference to the records will permit their transfer to an FRC

Microfilming

A micrographic system is used within the Department of the Navy (DON) for two basic purposes:

- To improve administrative or operating processes
- To replace paper records when it has been determined that space and equipment savings or other benefits will outweigh microfilming costs

Transfer

Indefinite or permanent retention of official records is known as preservation. This does not include those records retained at the local level, but is composed of all official records retained at an authorized FRC. Few records are actually transferred for preservation. Those records that have a retention value are transferred to the nearest FRC, unless authority for an exception is authorized by SECNAVINST 5212.5C. An up-to-date listing of FRCs is contained in SECNAVINST 5212.5C, appendix C.

A Records Transmittal and Receipt, Standard Form 135, must be sent to the FRC for approval before shipping records. Complete the form in triplicate. Forward the original and two copies of the form to the FRC. Do not ship the records at this time. The FRC will review the form for completeness and accuracy and return one copy of the form authorizing shipment of the records.

TERMINATING FILES

Termination of a file means that you close out the entire file and begin a new one to run until the next termination date. Since your terminated file will be relatively inactive, it should be placed in an appropriate location.

So that your records may be disposed of systematically and in blocks, files are terminated periodically. This makes your job of deputation and removal of the records for destruction or transfer much easier.

If your volume of correspondence is too great for terminating your files at the end of each calendar year, you may terminate them semiannually. You may also remove and destroy certain material on a daily basis; however, you will find this procedure impractical at most activities.

REVIEWING

The instructions for records disposal usually contain listings of material or items by subject matter. It is easy to determine whether a particular group of documents should be destroyed locally, held until eligible for destruction, or forwarded to an FRC.

To guarantee timely disposal of your records, it is a good idea to label your records disposal instructions for each file you maintain, showing the disposal authority. Periodically check your instructions and take appropriate action. Remove for immediate burning, scrapping, or shipping those groups that have passed the deadline for final disposition. Be sure the disposition date has passed so you are not disposing of material on which action may be pending.

Records designated in disposal instructions for transfer to an FRC are forwarded as scheduled or earlier. nose records designated for permanent or indefinite retention and records for which you cannot find a disposal authority are transferred when they are of no further value to the activity.

DESTRUCTION DATES

Federal law makes it mandatory that, except in extenuating circumstances, records scheduled for destruction must be destroyed. This doesn’t mean, however, that each and every item must be disposed of on the day authorized for destruction. You will recall the discussion in previous paragraphs on terminating the files. Individual commands setup any sort of destruction program they wish, such as once every 3 months, semiannually, or annually as convenient. What the law intends is that records no longer having value should not take up valuable space over long periods of time. This is especially important on ships, where every square foot of space has an allotted purpose. It must be emphasized that records are not to be destroyed before the scheduled destruction date except in case of emergency.

WHERE TO SHIP AND HOW TO SHIP

Certain specialized record categories are centralized at designated centers for convenience of administration and reference. The records to be centralized are listed in Navy records disposal schedules for transfer to the designated specialized center.

SECNAVINST 5212.5C indicates that personnel records are always shipped to the following records center:

Civilian personnel records	National Personnel Records Center (Civilian Personnel Records) 111 Winnebago Street St. Louis MO 63118
Navy and Marine Corps military records	National Personnel Records Center (Military Personnel Records) 9700 Page Boulevard St. Louis MO 63132

Other records are shipped to the appropriate FRC listed in appendix C, SECNAVINST 5212.5C. As a general rule, this is the nearest center.

Packing for Shipment

Records are packed in standard FRC cartons preserving the original file arrangement. Leave a half-inch space for each carton to permit easy withdrawal of folders. Use only standard record center cartons available through General Services Administration (GSA). FRCs will reject any shipment of records not in authorized records center cartons. Each carton holds 1 cubic foot of material. Letter-size folders are packed upright facing the front of the carton, legal-size folders facing the left side of the carton. The front is the 10-inch by 12-inch end opposite the staple end (fig. 6-3). Contact FRC regarding shipments of odd-sized material such as bound volumes, ledgers, maps, and charts that will not tit into standard FRC cartons or fragile items such as glass plate negatives that require special handling.

Using a permanent black felt-tip marker, write the full accession number (items 6 [a], [b], and [c]) of the approved Standard Form 135; for example, 181-87-134, in the front upper left corner of each carton. Also, number the cartons sequentially; for example, 1 of 10, 2 of 10, in the front upper right corner of each carton as shown in figure 6-3. Do not use labels to mark cartons. No standard method of affixing labels is effective in long-term FRC storage. Write the accession number and box number directly on the box.

Classified Records

Classified records are shipped according to the *Information and Personnel Security Program Regulations Manual*, OPNAVINST 5510.1H. Before packing classified records, make every effort to declassify them under the provisions of OPNAVINST 5510.1H. Those records that cannot be declassified should be carefully inventoried and shipped according to security regulations contained in OPNAVINST 5510.1H. All FRCs have classified stowage space for all categories of security classified records.

Federal Records Centers

Ten Federal Records Centers (FRCs) have been established at locations conveniently accessible to the various geographic areas. COMNAVDAC, under the Chief of Naval Operations, is responsible for managing the Navy Records Disposal Program, managing SECNAVINST 5212.5C, and acting as the single Navy liaison with the NARA regarding naval records disposition.

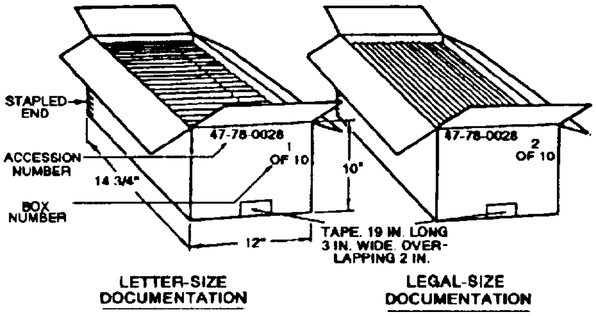

Figure 6-3.-Packing records for shipment.

ACCESS TO CENTER RECORDS

The NARA and FRCs provide prompt reference service on or access to records in their custody under the following conditions:

- NARA. The Archivist of the United States is authorized to grant access to or release information from the permanent Navy and Marine Corps unclassified records in the NARA's legal custody according to the Freedom of Information Act.
- FRCs. FRCs will furnish information or documents only by authority of the record group manager and in some cases to personnel of the activity that transferred the records. Requests for access or information from other than authorized personnel will not be honored. If the activity has been disestablished, approval must be obtained from the cognizant records manager. An exception to the rule applies if, at the time of transfer, the transferring activity grants blanket approval to FRCs to release information to those properly and rightfully concerned. Activities are encouraged to grant such blanket authority on routine, unrestricted, and unclassified tiles. Note the blanket authority on the Standard Form 135 at the time of transfer.

The National Archives and FRCs normally provide the following services:

- Information over the telephone in emergencies only
- Authenticated copies of documents for a fee
- Original documents on a loan basis
- Information extracted from the records, provided prior arrangements are made and personnel are available

Requests for FrC reference services should be made in writing directly to the FRC by the requesting activity. Centers also will grant authorized personnel access to review the records at the centers. Requests for reference service from the National Archives should be made only through command records managers.

Records transferred to the custody of the NARA (either to the National Archives or to the FRCs) may be withdrawn for reference on a 30-day loan basis. However, requests for the indefinite or permanent withdrawal of records from the National Archives should be made to COMNAVDAC (Code 80).